UniFi Access Door Hub

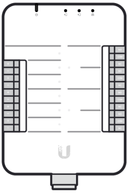

a

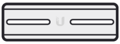

b

c

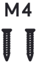

d

1

A

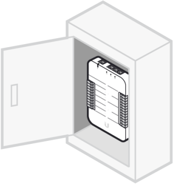

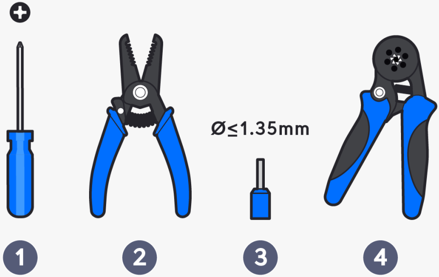
Ø≤1.35mm
1
2
3
4

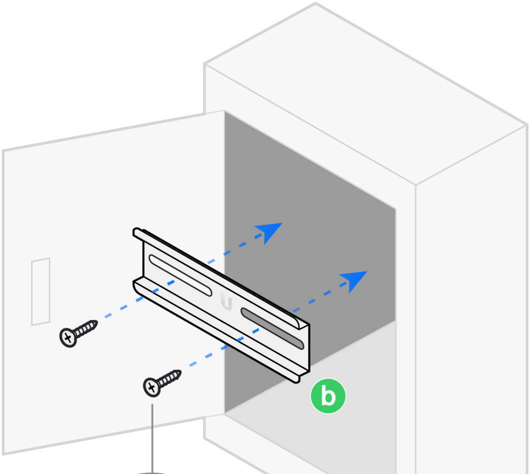

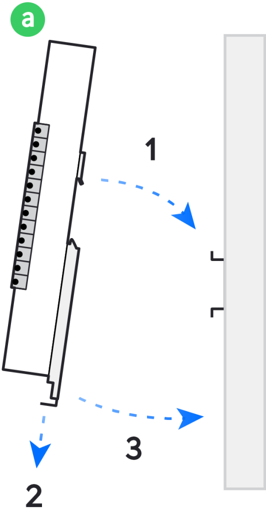

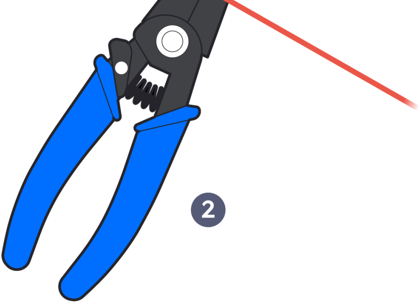

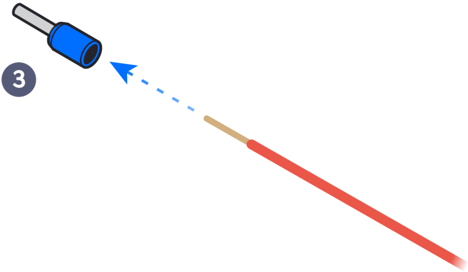

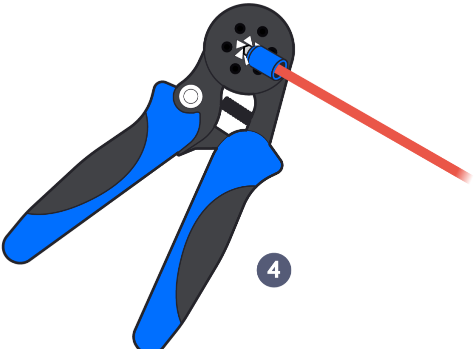

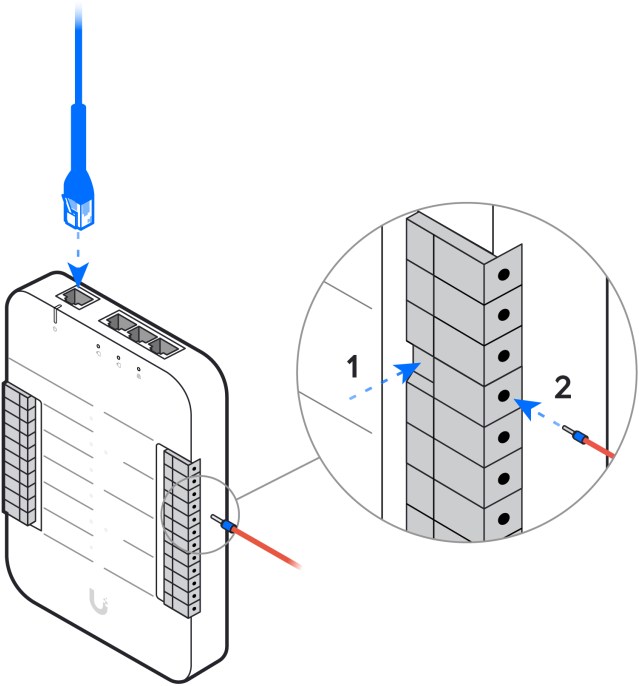

B

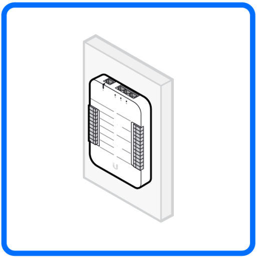

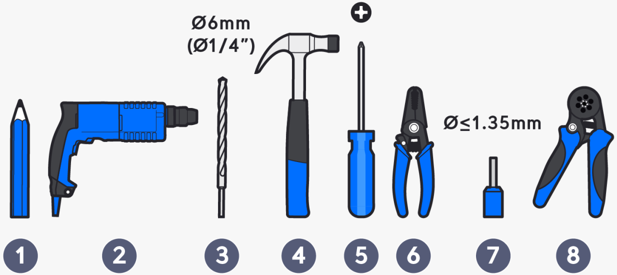
Ø6mm
(Ø1/4")
Ø≤1.35mm
1
2
3
4
5
6
7
8

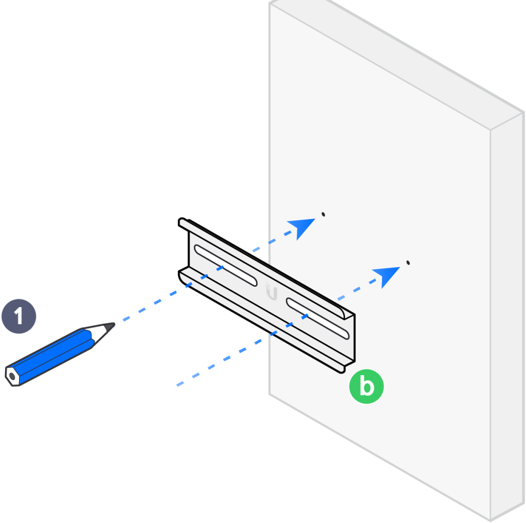

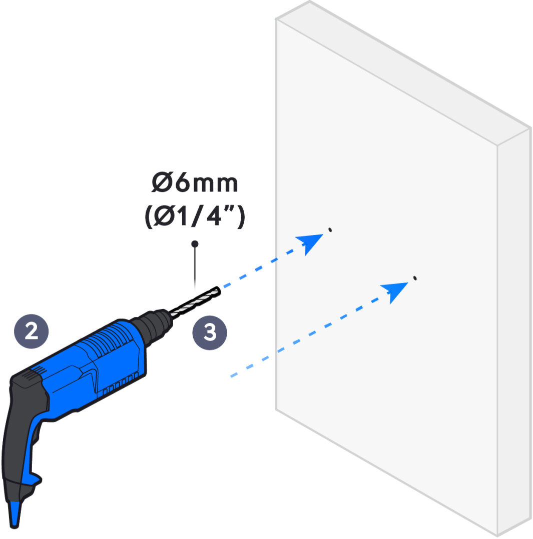

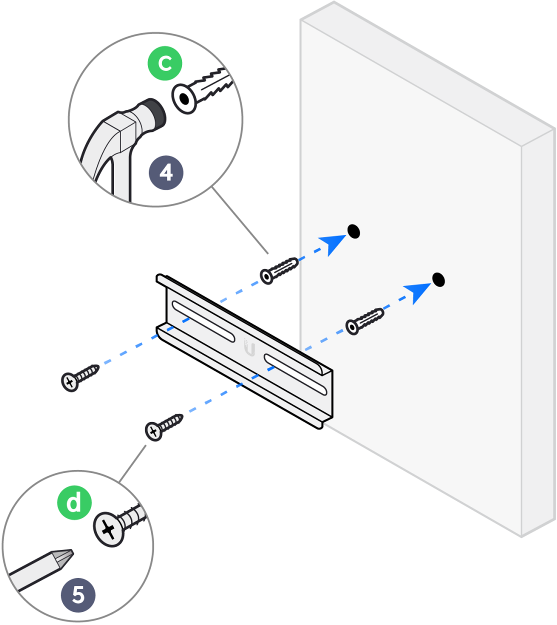

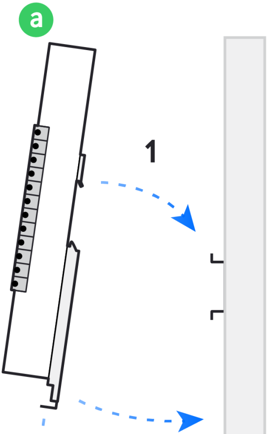

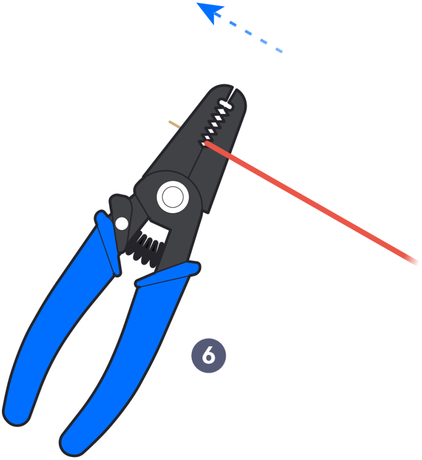

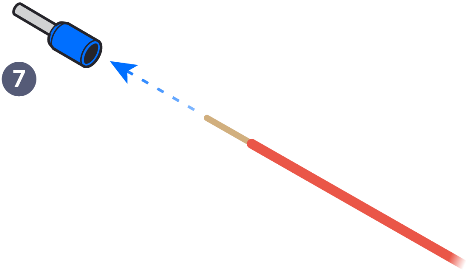

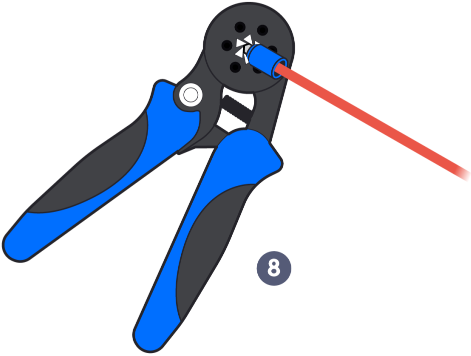

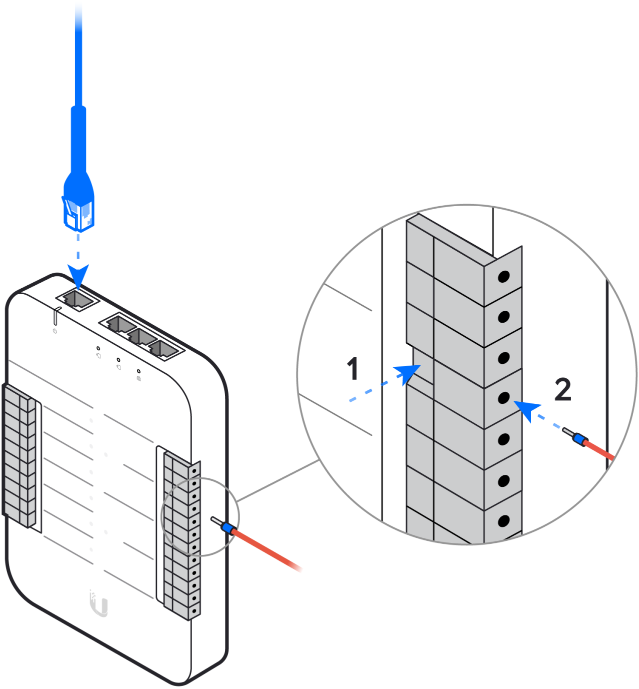

2

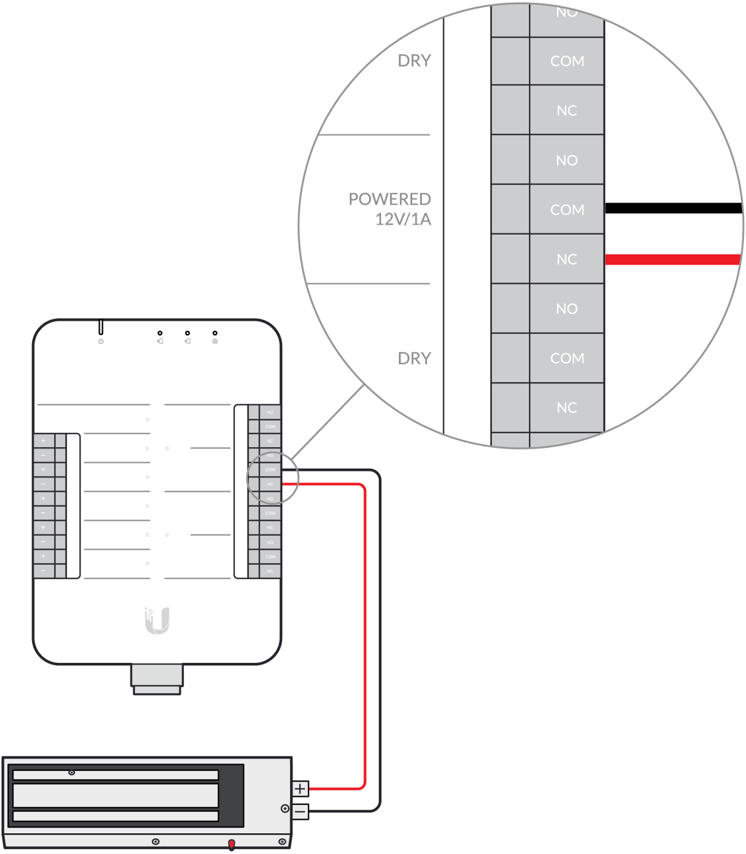
DRY
POWERED
12V/1A
DRY
NO
COM
NC
NO
COM
NC
NO
COM
NC
+
−

Fail-Safe Lock

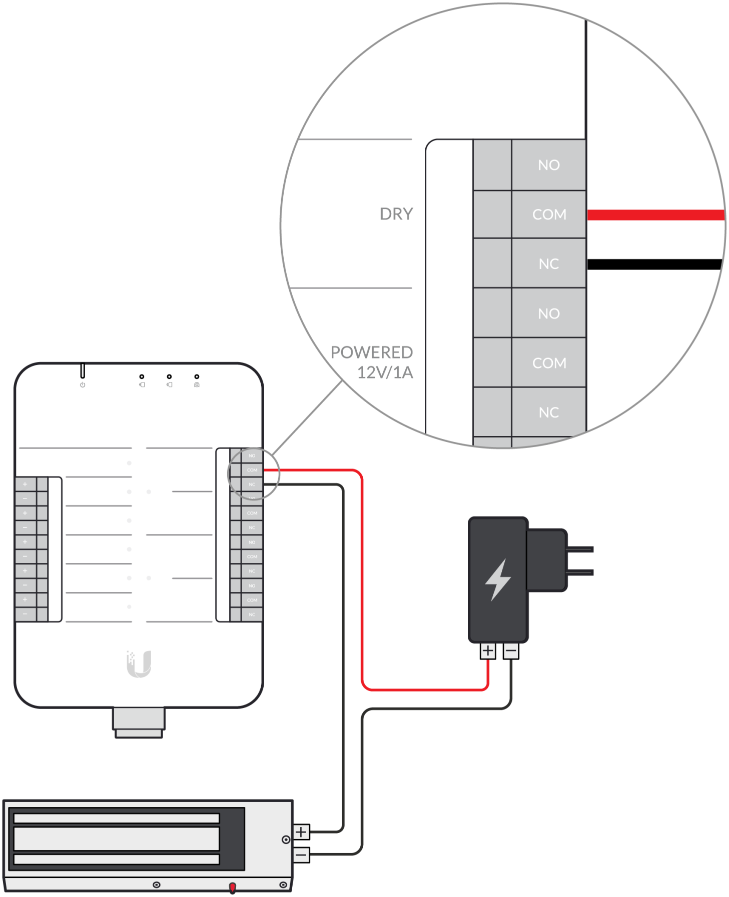
DRY
POWERED
12V/1A
NO
COM
NC
NO
COM
NC
+
−
+
−

Fail-Safe Lock

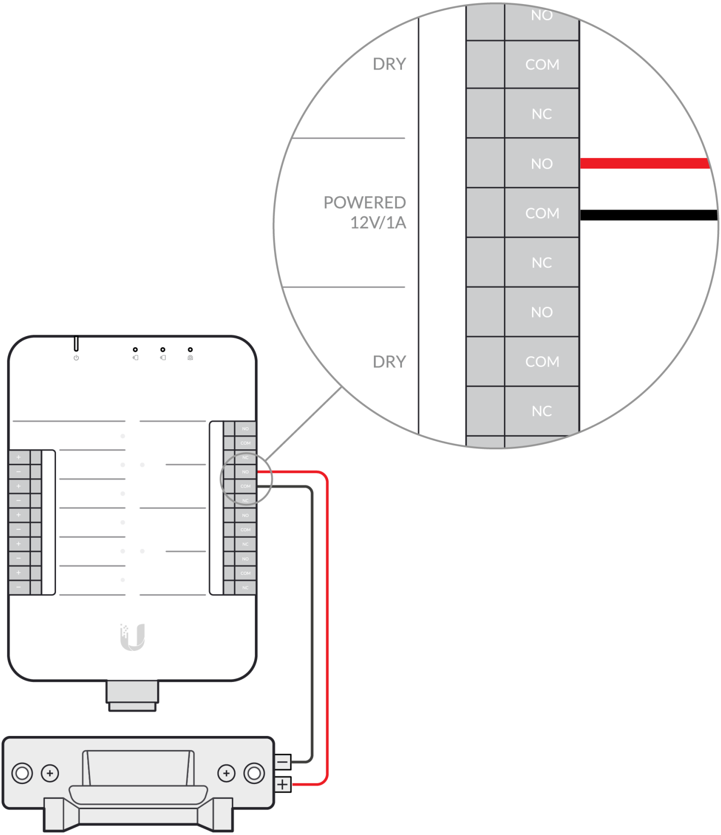
NO
DRY
COM
NC
NO
POWERED
12V/1A
COM
NC
NO
DRY
COM
NC

Fail-Secure Lock

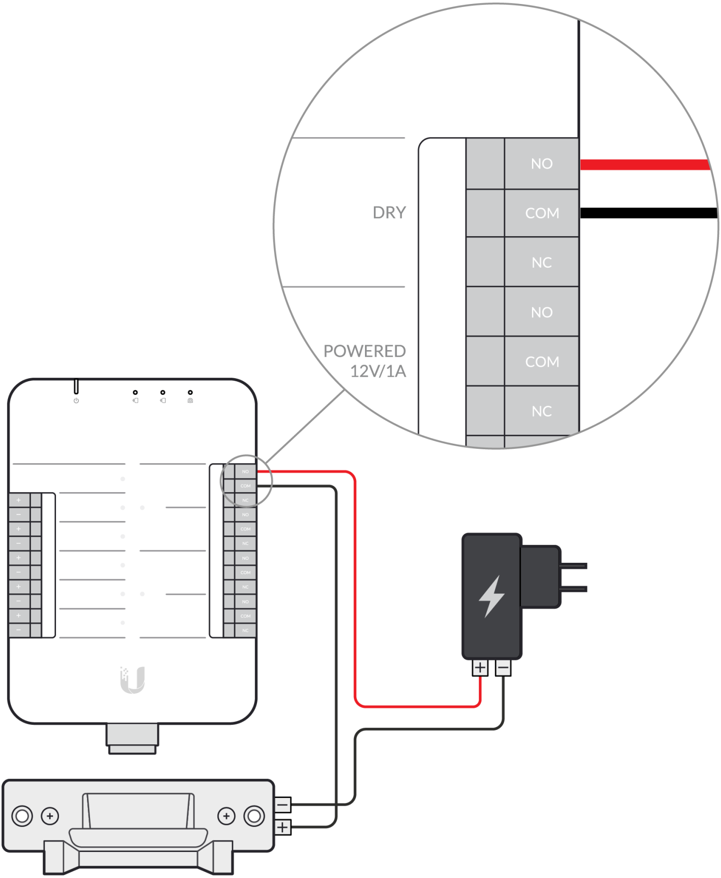
DRY
POWERED
12V/1A
NO
COM
NC
NO
COM
NC
+
−

Fail-Secure Lock

Push Button

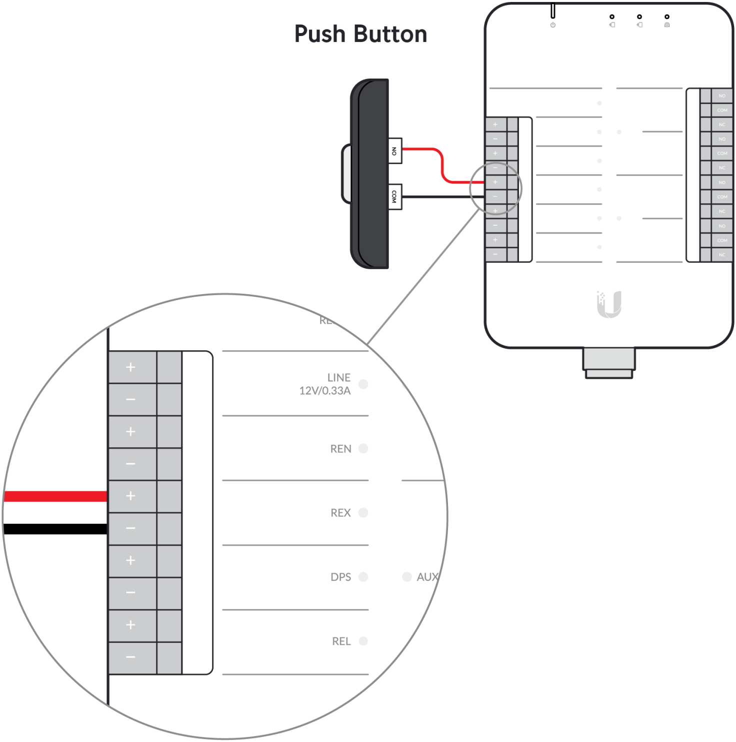
NO
COM
+
−
NO
COM
NC
RE
LINE
12V/0.33A
REN
REX
DPS
AUX
REL

Door Position Switch (Door Sensor)

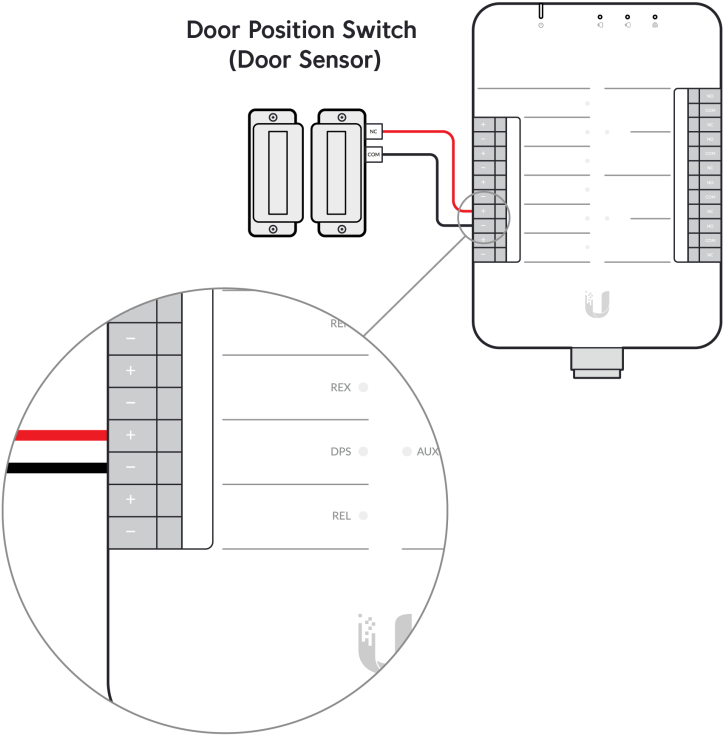
NC
COM
NO
COM
NC
REX
REX
DPS
AUX
REL
+
−

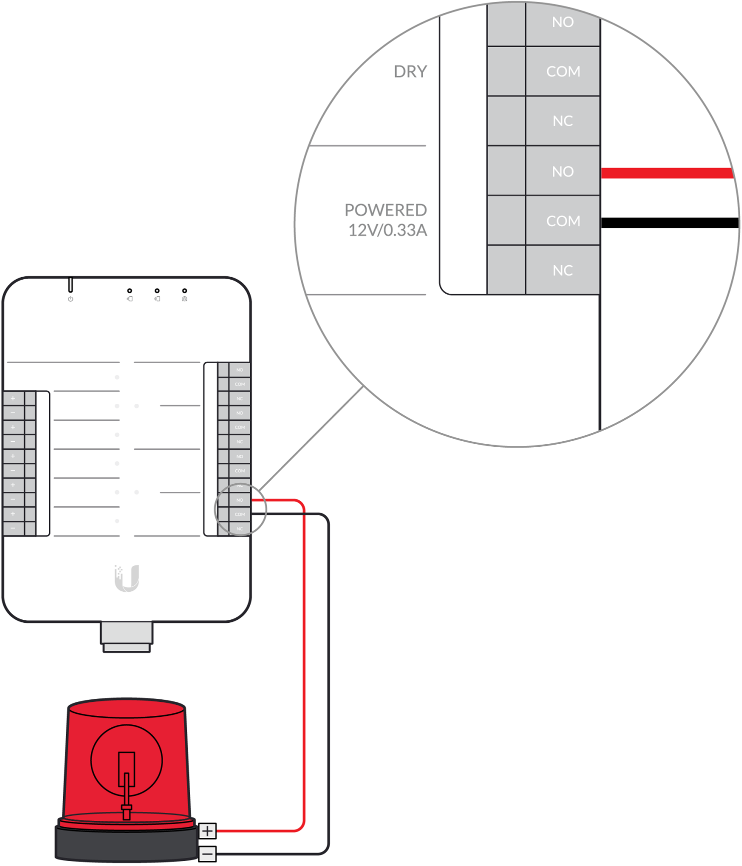
DRY
POWERED
12V/0.33A
NO
COM
NC
NO
COM
NC
+
−
Siren

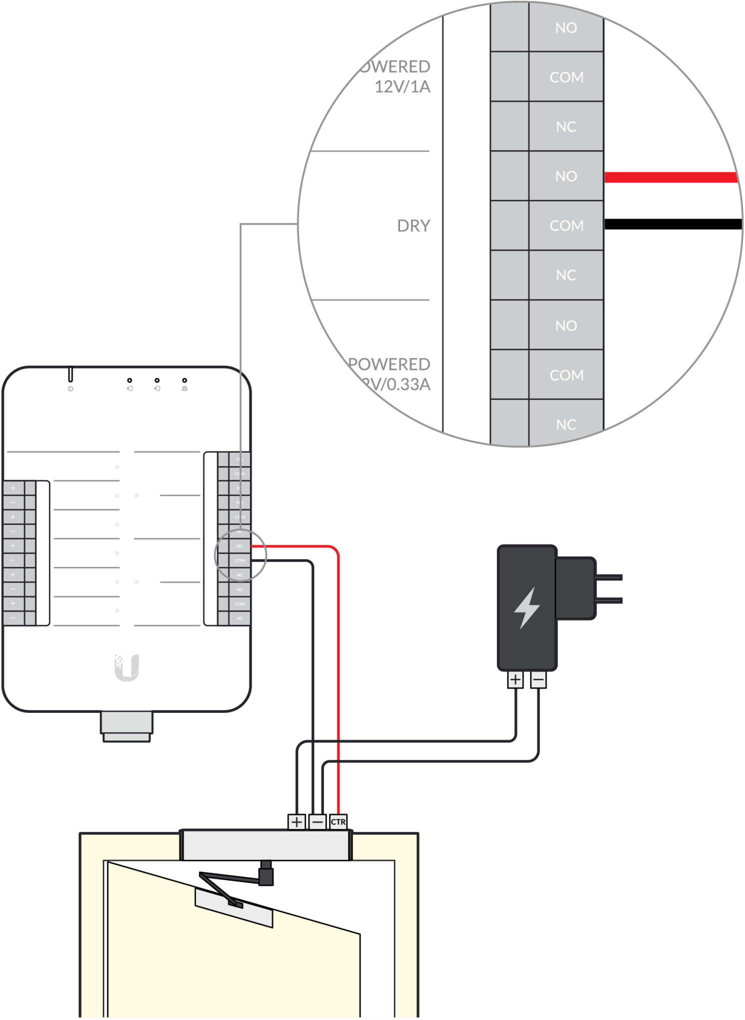
OWERED
12V/1A
DRY
POWERED
2V/0.33A
NO
COM
NC
NO
COM
NC
NO
COM
NC
+
−
+
−
CTR

Door Operator

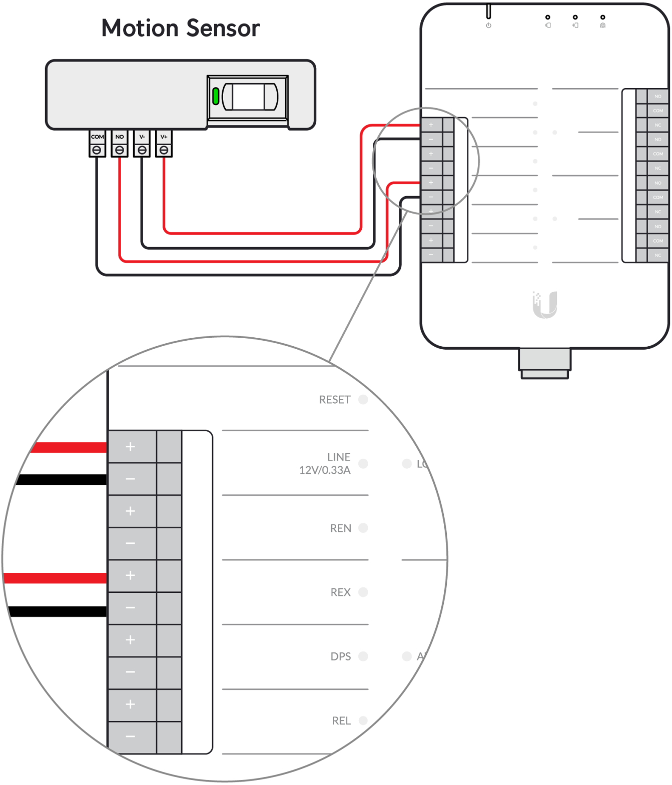
Motion Sensor
COM
NO
V-
V+
NO
COM
NC
+
−
RESET
LINE
12V/0.33A
REN
REX
DPS
REL

3

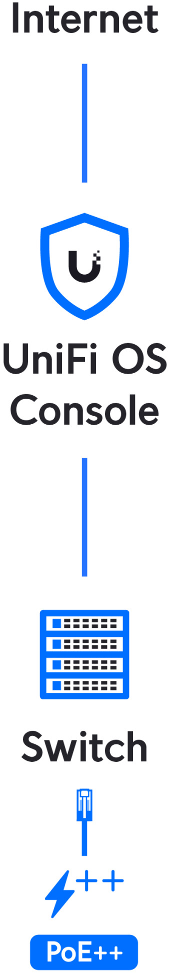
Internet
UniFi OS Console
Switch
PoE++

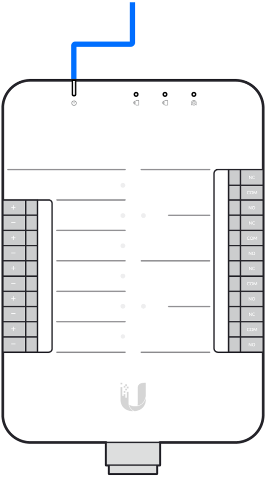
+
−
+
−
+
−
+
−
+
−
NC
COM
NO
NC
COM
NO
NC
COM
NO
NC
COM
NO

4

Download on the App Store

GET IT ON Google Play

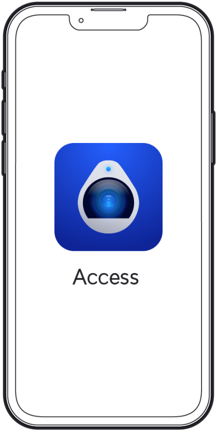

Get Answers
help.ui.com

UI Support

©2019-2021 Ubiquiti Inc. All rights reserved. Ubiquiti, Ubiquiti Networks, the Ubiquiti U logo, UniFi Access, and UniFi are trademarks or registered trademarks of Ubiquiti Inc. in the United States and in other countries. All other trademarks are the property of their respective owners.